Environmental Policy, Allocation of Resources, Sector Structure and Comparative Price Advantage

Von Horst Siebert*

The paper analyzes how environmental policy affects sector structure, the allocation of resources and comparative price advantage in a two-sector equilibrium model.

Environmental quality can be considered as a public good being influenced by emissions from consumption and production processes. Since the assimilative capacity of the environment has been used so far as a free production input, the common-property-resource has been heavily overused. Environmental policy attempts to decide which of the competing uses of the environment should have priority and by which policy instruments environmental scarcity can be internalized into the decisions of the subsystems of the economy.

In this paper we analyze to what extent environmental policy will affect sector structure, the allocation of resources and relative price. Since relative price in a closed economy determines comparative advantage (relative to the foreign country), the paper also answers the question to what extent environmental policy will affect the comparative price advantage of a country. In former models (*Siebert* 1974, 1976) only partial equilibrium models were developed neglecting the demand side or not closing the model with respect to receipts from the emission tax. In this paper, the model is closed with respect to the demand side, and demand conditions are explicitly taken into consideration.

The frame of reference is a two-sector-model in which production generates pollutants as a joint product. The government levies an emission tax per unit of pollutant emitted to the environment. We treat the environment as a national public good and ignore international, transnational and regional environmental systems[1]. Section I presents the assumptions, Section II develops the model, and in Section III the implications of the model are discussed. Section IV points out possible extensions.

---

* Universität Mannheim (WH), D-6800 Mannheim A 5.

[1] On these problems compare *Walter* (1975).

DOI https://doi.org/10.3790/schm.98.3.281 | Generated on 2025-11-18 19:08:31
OPEN ACCESS | Licensed under CC BY 4.0 | https://creativecommons.org/about/cclicenses/

I. Assumptions

A 1. In order to keep the model as simple as possible we assume only one type of resource, R, and a production function

$$Q_i = F_i(R_i) \quad \text{with} \quad F_i' > 0,\ F_i'' < 0 \tag{1}$$

A 2. The production of commodities $i = 1, 2$ generates pollutants S_i^p as a joint product. For simplifying purposes there is only one type of pollutants. It is assumed that pollutants emitted rise proportionally or progressively with resources used, i. e.

$$S_i^p = H_i(Q_i) = H_i[F_i(R_i)] = Z_i(R_i) \ \text{ with } \ Z_i' > 0,\ Z_i'' \geqq 0;\ H_i' > 0 \tag{2}$$

The convex emission function Z_i is suggested intuitively by engineering production functions[2]. With the activity level of an engine reaching or exceeding capacity, it is realistic to assume that inputs have to be increased progressively for an additional unit of output. This suggests that emissions rise progressively. A more precise explanation for the convexity of the emission function follows from the application of the mass balance concept to production functions. In terms of weight a mass balance exists between input and output. Since mass cannot be lost in a production process, regular output and emissions must be identical to inputs, in weight terms. Define the production function in weight terms. For a given technology this function must be concave, if the regular production function is concave. Then it follows that the emission function Z_i must be convex.[3]

A 3. Resources may also be used for abatement purposes. Let S_i^r indicate the quantity of pollutants reduced in Sector i. The abatement function is given by

$$S_i^r = F_i^r\left(R_i^r\right) \quad \text{with } F_i^{r\prime} > 0,\ F_i^{r\prime\prime} < 0 \tag{3}$$

The abatement function describes a technology that prevents pollutants from entering the environment. Additionally it could be assumed that a technology exists to reduce pollutants ambient in the environment (water treatment).

A 4. Net emissions or pollutants ambient in the environment are defined as emissions produced minus emissions abated. A diffusion function is not explicitly introduced.

$$S_i = S_i^p - S_i^r \tag{4}$$

---

[2] *Gutenberg* (1972), S. 326.
[3] Compare *Sontheimer* (1975).

DOI https://doi.org/10.3790/schm.98.3.281 | Generated on 2025-11-18 19:08:31
OPEN ACCESS | Licensed under CC BY 4.0 | https://creativecommons.org/about/cclicenses/

A 5. Firms maximize profits and regard commodity prices, factor prices and the emission tax as given.

A 6. The resource can be used for production and abatement and is given

$$R_1 + R_2 + R_1^r + R_2^r = \bar{R} \tag{5}$$

A 7. Commodity demand is given by

$$Q_i^D = D_i(p, Y) \tag{6}$$

with $p = \tilde{p}_1/\tilde{p}_2$ where $\tilde{p}_i$ indicate nominal prices and p is the relative price.

A 8. Income Y is defined from the production side. There are no savings. In order to close the model, we assume that the government spends the tax income received in form of transfers to the households. Consequently disposable income of the households is identical to net national income at market prices and is defined as

$$Y = pQ_1 + Q_2 \tag{7}$$

Observe that Y includes transfers not explicitly shown and that p is consumers price and not producers price. If Y would be defined with respect to producers price p^*, emissions taxes (and transfers) would appear explicitly on the right side of (7).

A 9. Commodity markets must be in equilibrium so that

$$Q_i = Q_i^D \tag{8}$$

A 10. The government levies an emission tax $\tilde{z}$ (in nominal terms) on net emissions S_i, with $\tilde{z}$ being changed parametrically[4].

II. The model

1. Factor demand by the profit maximizing firm is given by maximizing

$$L_i = \tilde{p}_i Q_i - \tilde{r}(R_i + R_i^r) - \tilde{z}S_i$$

$$\text{s. t. } Q_i - F_i(R_i) \leq 0$$

[4] Additionally, a damage function may be introduced indicating that environmental quality is affected by net emissions

$$U = G(S) \quad with\ G' < 0,\ G'' < 0.$$

DOI https://doi.org/10.3790/schm.98.3.281 | Generated on 2025-11-18 19:08:31
OPEN ACCESS | Licensed under CC BY 4.0 | https://creativecommons.org/about/cclicenses/

$$H_i(Q_i) - S_i^p \leq 0$$

$$S_i^r - F_i^r(R_i^r) \leq 0$$

$$-S_i + S_i^p - S_i^r \leq 0$$

where r denotes the resource price in nominal terms. Assuming that production takes place in both sectors, i. e. that we have a meaningful problem, and defining $r = \tilde{r}/\tilde{p}_2$ and $z = \tilde{z}/\tilde{p}_2$ the conditions for profit maximizing factor demand are given as

$$\begin{aligned} r &= (p - zH_1')\,F_1'(R_1) \\ r &= (1 - zH_2')\,F_2'(R_2) \\ r &= zF_i^{r''}(R_i^r) \end{aligned} \tag{9}$$

2. The system of equations (1) - (9) has the 17 variables S_i^p, S_i, S_i^r, Q_i, R_i, R_i^r, Q_i^D, p, Y and r and 18 equations. The definition of Y in equation 7 states that total demand is equal to income, so that in a two-sector model the equilibrium condition for one of the product markets is redundant (Walras Law) and should be omitted. By substitution the system can be simplified to

$$\begin{aligned} &F_1(R_1) = D_1(p, pF_1(R_1) + F_2(R_2)) && \text{(i)} \\ &r = zF_i^{r'}(R_i^r) && \text{(ii-iii)} \\ &r = (p - zH_1')\,F_1'(R_1) && \text{(iv)} \\ &r = (1 - zH_2')\,F_2'(R_2) && \text{(v)} \\ &\overline{R} = R_1 + R_2 + R_1^r + R_2^r && \text{(vi)} \end{aligned} \tag{10}$$

Total differentiation and substitution of (10 vi) into (i) - (v) yields

$$\begin{bmatrix} a_1 & 0 & 0 & 1 & -F_1' \\ 0 & a_2 & 0 & 1 & 0 \\ 0 & 0 & -zF_1^{r''} & 1 & 0 \\ zF_2^{r''} & zF_2^{r''} & zF_2^{r''} & 1 & 0 \\ b_1 F_1' & -D_{1Y}' F_2' & 0 & 0 & -b_2 \end{bmatrix} \begin{bmatrix} dR_1 \\ dR_2 \\ dR_1^r \\ dr \\ dp \end{bmatrix} = \begin{bmatrix} -H_1' F_1' dz \\ -H_2' F_2' dz \\ F_1^{r'} dz \\ F_2^{r'} dz \\ 0 \end{bmatrix} \tag{11}$$

DOI https://doi.org/10.3790/schm.98.3.281 | Generated on 2025-11-18 19:08:31
OPEN ACCESS | Licensed under CC BY 4.0 | https://creativecommons.org/about/cclicenses/

The coefficients are defined as follows[5]

$$a_i = zH_i'' F_i'^2 - (p_i - zH_i') F_i'' > 0 \qquad \text{(i)} \tag{12}$$

$$b_1 = 1 - D_{1Y}' p = D_{2Y}' \qquad \text{(ii)}$$

$$b_2 = D_{1p}' + D_{1Y}' F_1 < 0 \qquad \text{(iii)}$$

In (12 i) we have $p_i = p$ for $i = 1$ and $p_i = 1$ for $i = 2$.

III. Implications

The problem is to determine how the allocation of resources is affected by environmental policy. We first study how factor demand of firms changes with an emission tax for a given relative price p. We then analyze how relative price changes, and how the allocation of resources and national income are affected in this case.

1. Assuming a given commodity price and considering only the factor market conditions and the resource constraint, i. e. (10 ii - vi), the change in factor use in response to an increase in the emission tax is given by the subsystem of equation 11 not containing the fifth row of the system and not containing the fifth column of the matrix of derivatives. From appendix I we have the following results

$$\frac{dR_1^r}{dz} > 0 \tag{13 i}$$

$$\frac{dR_1}{dz} < 0\text{: } H_1' F_1' > H_2' F_2' \tag{13 ii}$$

$$\frac{\Sigma\, dR_i}{dz} < 0 \tag{13 iii}$$

$H_i' F_i'$ indicates the marginal tendency to pollute (per unit of resource). $H_1' F_1' > H_2' F_2'$ specifies that Sector 1 is pollution intensive[6]. For

[5] $b_2 < 0$ follows from Slutsky's rule. Let $D_{1p_{\text{comp.}}}'$ denote the pure substitution effect. We have

$$D_{1p}' = D_{1p_{\text{comp.}}}' - D_{1Y}' D_1 \text{ or } D_{1p_{\text{comp.}}}' = D_{1p}' + D_{1Y}' F_1 (R_1) = b_2 < 0 \ ,$$

since the pure substitution effect is always negative.

[6] If $Z_1 (R_1) > Z_2 (R_2)$ for $R_1 = R_2$, $H_1' F_1' > H_2' F_2'$ can be specified as $\frac{S_1^p}{R_1} > \frac{S_2^p}{R_2}$ for $R_1 \geq R_2$. This transformation also holds for $R_1 < R_2$ if either Sector 1 is not "very" small compared to Sector 2 or if Z_2 has a sufficiently weaker curvature than Z_1. Observe that $H_1' F_1' > H_2' F_2'$ demands that the Z_i-function should not cross, i. e. emission intensities should not be reversed.

DOI https://doi.org/10.3790/schm.98.3.281 | Generated on 2025-11-18 19:08:31
OPEN ACCESS | Licensed under CC BY 4.0 | https://creativecommons.org/about/cclicenses/

given commodity prices, an emission tax will reduce the output of the pollution-intensively produced commodity. Resource use in the pollution abatement activity of the pollution-intensively producing sector will increase. Also we know that resources will be withdrawn from production and will be used in abatement activities. This effect does not depend on differences in the production intensity of the two sectors.

2. Allowing the commodity price to vary we have the following results from appendix II (as sufficient conditions):

(14 i) $$\Delta > 0: \begin{cases} D'_{2Y} \geq 0 \\ D'_{1Y} F'_2 + D'_{2Y} F'_1 \geq 0 \end{cases}$$

(14 ii) $$\frac{dR_1^r}{dz} > 0: \; D'_{1Y} F'_2 + D'_{2Y} F'_1 \geq 0$$

Assuming (14 i) is given we have

(14 iii) $$\frac{\Sigma\, dR_i}{dz} < 0$$

(14 iv) $$\frac{dR_1}{dz} < 0: \begin{cases} D'_{1Y} \geq 0 \\ H'_1 F'_1 > H'_2 F'_2 \end{cases}$$

(14 v) $$\frac{dp}{dz} > 0: \begin{cases} H'_1 F'_1 > H'_2 F'_2 \\ a_2 D'_{2Y} F'^2_1 p \geqslant a_1 D'_{1Y} F'^2_2 \end{cases}$$

(14 vi) $$\frac{dY}{dz} < 0: \begin{cases} H'_1 F'_1 > H'_2 F'_2 \\ -\eta_{1p} > \alpha > 1 \quad \text{with } \alpha = \dfrac{1}{1 - \dfrac{F'_2}{pF'_1}} \end{cases}$$

In (14 vi) η_{1p} denotes the direct price elasticity of demand.

Diagram 1 summerizes the sufficient conditions of equation 14.

We have the following results:

3. Assume both commodities are not inferior, so that their marginal propensities to consume ($D'_{iY} \geq 0$) are nonnegative. Then the determinant $\Delta > 0$. Assume Sector 1 is the pollution-intensively producing sector. Then we have:

Resource use in the pollution-intensively producing sector will decline. Resource use in each abatement activity will increase; resource in production (ΣR_i) will be reduced.

DOI https://doi.org/10.3790/schm.98.3.281 | Generated on 2025-11-18 19:08:31
OPEN ACCESS | Licensed under CC BY 4.0 | https://creativecommons.org/about/cclicenses/

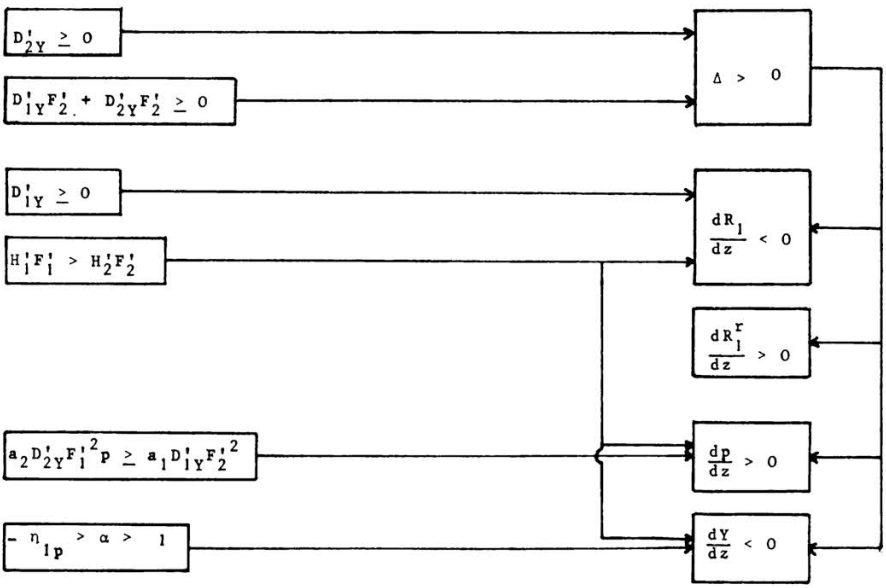

Diagram 1: Sufficient conditions

Environmental policy will shift the sector structure of the economy in favor of the abatement activities with production being affected negatively. We can establish that production in the pollution-intensively producing sector will decline[7]. In the less pollution-intensively producing Sector 2, resource use may increase or decrease. The model allows both cases. Thus, in one case Sector 1 and Sector 2 lose resources to the abatement activity, whereas in the other case, Sector 1 loses resources to Sector 2 and the abatement activity. Under the assumptions made, emissions will be reduced and environmental quality will improve. This follows from $\Sigma\, dR_i/dz < 0$ and $\Sigma\, dR^r_i/dz > 0$.

4. Condition (14 v) for a rise in the relative price can be split into two sufficient conditions[8].

i) $D'_{2Y} \geq pD'_{1Y}$. Under the conditions specified below, national income will decline as a consequence of environmental policy. Then $D'_{2Y} \geq pD'_{1Y}$ guaranties that demand for the pollution-intensively produced commodity 1 is reduced less than demand for the commodity 2. This difference in the income effect of the two commodities makes sure that

[7] This also holds if Sector 2 were the pollution-intensively producing sector.

[8] Note hat $F'_1\, p > F'_2$ follows from $H'_1\, F_1 > H'_2\, F'_2$.

DOI https://doi.org/10.3790/schm.98.3.281 | Generated on 2025-11-18 19:08:31
OPEN ACCESS | Licensed under CC BY 4.0 | https://creativecommons.org/about/cclicenses/

the relative price of the pollution-intensively produced commodity must rise.

ii) $a_2 \geq a_1$: $\left|\frac{dR_1}{dr}\right| > \left|\frac{dR_2}{dr}\right|$ specifies[9] that (for given p and z), Sector 1 is more sensitive to changes in resource price than Sector 2; we may also say that Sector 1 is more dependent on the resource R. This condition can be interpreted as a rudimentary form of a factor-intensity condition in a one-factor model. We can expect that this condition unfolds into a set of factor intensity conditions in a multi-factor model. As a result we have:

The relative price of the pollution-intensively produced commodity will rise if the marginal propensity to consume for this commodity is lower than the less pollution-intensively produced commodity and if the pollution-intensively producing sector depends heavily on the resource R.

Sufficient conditions for a rise in the relative price can partly substitute each other. Assume Sector 1 is "very" pollution-intensive[10]. Then the relative price of commodity 1 may rise even if it has a high income elasticity of demand and loses demand quantities with a decline in income. Or for identical pollution-intensities of both sectors, the relative price will rise, if Sector 1 has a sufficiently smaller propensity to consume and thus loses a smaller quantity in demand requiring a higher adjustment in relative price. Finally, assume Sector 2 heavily depends on resource R. Then p can rise nevertheless, if Sector 1 is sufficiently more pollution-intensive or if Sector 1 has a sufficiently lower income elasticity.

$dp/dz > 0$ indicates that environmental policy will under the conditions indicated affect the comparative price advantage of a country. Assume a country exports the pollution-intensively produced commodity 1. Then environmental policy will reduce the comparative price advantage of that country[11]. Consider two countries with a different abundance of environmental services and assume that $z > z^*$ reflects the difference in endowment with z^* indicating the emission tax of the

---

[9] Differentiate the factor demand conditions (9) for given p and z with respect to r

$$\frac{dR_i}{dr} = \frac{1}{\left[\left(\frac{p_i}{p_2}\right) - zH_i'\right]F_i'' - zH_i''F_i'^2} = -\frac{1}{a_1} \quad \text{and} \quad \left|\frac{dR_1}{dz}\right| > \left|\frac{dR_2}{dz}\right| : a_2 > a_1$$

[10] Assume for instance Sector 2 does not pollute at all with $H_2' = 0$.

[11] If a country exports the less pollution-intensive commodity and if it undertakes environmental policy, its comparative price advantage will be improved.

DOI https://doi.org/10.3790/schm.98.3.281 | Generated on 2025-11-18 19:08:31
OPEN ACCESS | Licensed under CC BY 4.0 | https://creativecommons.org/about/cclicenses/

foreign country. If all other factors influencing the autarky prices are identical in the two countries we have $p(z) > p^*(z^*)$ which implies that the country abundant in environmental services will have a comparative price advantage and will export the pollution-intensively produced commodity.

5. Net national product at market prices Y is affected by environmental policy in two ways:

— Resource use in production will decrease, so that for a given price p national income will fall (withdrawal effect).

— The pollution-intensively produced commodity has to be revalued since market price must include the social cost of production. The revaluation-effect runs counter to the withdrawal effect.

National income will fall if the withdrawal effect outweighs the revaluation effect. This is the case, if the price elasticity of demand for the pollution-intensively produced commodity is sufficiently large, i. e. $-\eta_{1p} > \alpha > 1$. (Condition 14 vi). A high price elasticity of demand for commodity 1 makes sure that the pollution-intensively producing sector will lose large demand quantities, so that the revaluation effect will not be too high.

From the definition of α we have an interesting interrelation between demand conditions and the condition of emission intensity.

i) Assume Sector 1 is strongly pollution-intensive[12] so that α is close to unity. Then the price elasticity does not have to be too high if the withdrawal effect is to be strong. A high pollution-intensity of Sector 1 means that production costs rise strongly in Sector 1, relative price will rise, and Sector 1 will lose demand quantities, even if the price elasticity of demand is not too high.

ii) If Sector 1 is only "weakly" pollution-intensive compared to Sector 2, α is higher than unity, and the demand for the pollution intensively produced commodity must be very elastic for demand quantities to decline. In other words, in condition (14 v) a high price elasticity of demand for the pollution-intensively produced commodity may be substituted by a strong pollution-intensity of Sector 1.

6. Structural policy will become an important issue in Western European countries in the future. Therefore it is of interest to determine how environmental policy will influence sectoral structure. We have

[12] Note that $pF_1' = r + zH_1' F_1'$ and $F_2' = r + zH_2' F_2'$, so that $H_1' F_1' > H_2' F_2'$ implies that $F_2'/pF_1' < 1$.

DOI https://doi.org/10.3790/schm.98.3.281 | Generated on 2025-11-18 19:08:31
OPEN ACCESS | Licensed under CC BY 4.0 | https://creativecommons.org/about/cclicenses/

already shown that the production sectors will be reduced and the abatement activities will increase. Measuring sector structure s in terms of resources used in the two sectors, i. e. $s = R_1/R_2$, we know that $ds/dz < 0$ if $dR_2/dz > 0$, since $dR_1/dz < 0$. This means that environmental policy will change sector structure to the disadvantage of the pollution-intensive sector. Since $dR_2/dz < 0$ cannot be ruled out, we are not sure, however, whether demand conditions are such that the pollution-intensively producing Sector 1 may expand relatively with environmental policy. From equation (I. 6) in the appendix it can be seen that sector structure measured in resource units will change in favor of Sector 2 (for given p), if

$$R_2 F_2' p D_{1Y}' > R_1 p F_1' D_{2Y}' \tag{15}$$

Assuming identical sector weights in the initial situation, i. e. $R_1 = R_2$, we have as a sufficient condition for Sector 1 to decline relatively that $pD_{1Y}' > D_{2Y}'$ where the difference must be large enough to offset $pF_1' > F_2'$ [13]. Condition (15) also is sufficient for the case of a variable price as can be seen from equation (II.7) in the appendix. Additionally sector structure can be defined as $s^* = pQ_1/Q_2$.

IV. Extensions

The foregoing analysis can be easily expanded. The following questions seem to be of interest.

1. If more than one resource is introduced, we can expect that the $a_2 \geq a_1$-condition will unfold into a set of factor-intensity conditions.

2. The model can easily be extended to an open economy. Then the market equilibrium conditions of equation (6) have to be substituted by the definition of excess demand functions

$$E_i = C_i - Q_i$$

and similarly for the foreign country. World markets must be in equilibrium, $E_i + E_i^* = 0$, and the balance of payment condition of the home country must be fulfilled

$$pE_1 + E_2 = 0.$$

3. In this case such questions as the effect of environmental policy on trade equilibrium and the term of trade may be analyzed. Also,

[13] Note that if this condition is not fulfilled, Sector 1 may decline relatively less since the first term in equation (I.6) in the appendix is negative.

DOI https://doi.org/10.3790/schm.98.3.281 | Generated on 2025-11-18 19:08:31
OPEN ACCESS | Licensed under CC BY 4.0 | https://creativecommons.org/about/cclicenses/

if the model is suitably extended, the effects of environmental policy on the balance of payments or the exchange rate may be studied. Finally the interesting question arises that the traditional gains from trade will be reduced, if a country specializes in the production of the pollution-intensively produced commodity. This is due to the fact that in a situation where no environmental policy is undertaken, comparative cost advantages are distorted and consequently the gains from trade are not specified correctly.

Appendix

I.

(I.1) $$D = a_1 \{a_2 z (- F_1^{r''} - F_2^{r''}) + z^2 F_1^{r''} F_2^{r''}\} + a_2 z^2 F_1^{r''} F_2^{r''} > 0$$

Define Z_1 and Z_2 as

$$Z_1 = (F_1^{r''} + F_2^{r''})\, a_2 p F_1' - z^2 F_1^{r''} F_2^{r''} (H_1' F_1' - H_2' F_2')$$

$$Z_2 = - (F_1^{r''} + F_2^{r''})\, a_1 F_2' - z^2 F_1^{r''} F_2^{r''} (H_1' F_1' - H_2' F_2') \,.$$

(I.2) $$\frac{dR_1}{dz} = \frac{Z_1}{D}$$

(I.3) $$\frac{dR_2}{dz} = - \frac{Z_2}{D}$$

(I.4) $$\frac{dR_1^r}{dz} = \frac{Z_3}{D} = - \frac{F_2^{r''}}{D} (a_1 F_2' + a_2 p F_1')$$

(I.5) $$\frac{dr}{dz} = \frac{r}{z} + z F_1^{r''} \frac{dR_1^r}{dz}$$

(I.6) $$\frac{d\,(R_1/R_2)}{dz} = \frac{1}{R_2^2 D} \{(F_1^{r''} + F_2^{r''})(a_2 p F_1' R_2 + a_1 F_2' R_1)\} + \\ + z_2 F_1^{r''} F_2^{r''} (H_1' F_1' - H_2' F_2')\ (R_1 - R_2)$$

II.

(II.1) $$\Delta = - b_2 D - a_2 D_2'\ F_1'^2 z (F_1^{r''} + F_2^{r''}) + z^2 F_1' F_1^{r''} F_2^{r''} (D_{1Y}' F_2' + D_{2Y}' F_1')$$

Define $\Delta_1 = - b_2 Z_1 + F_1' F_2'^2 D_{1Y}' (F_1^{r''} + F_2^{r''})$

(II.2) $$\frac{dR_1}{dz} = \frac{\Delta_1}{\Delta}$$

DOI https://doi.org/10.3790/schm.98.3.281 | Generated on 2025-11-18 19:08:31
OPEN ACCESS | Licensed under CC BY 4.0 | https://creativecommons.org/about/cclicenses/

(II.3) $$\frac{dR_2}{dz} = \frac{\Delta_2}{\Delta}$$

$$\Delta_2 = b_2 Z_2 + F_1'^2 F_2' D_{2Y}' (F_1^{r''} + F_2^{r''})$$

(II.4) $$\frac{dR_1^r}{dz} = \frac{\Delta_3}{\Delta}$$

$$\Delta_3 = \neg\, b_2 Z_3 - F_1' F_2' F_2^{r''} (D_{1Y}' F_2' + D_{2Y}' F_1')$$

(II.5) $$\frac{dp}{dz} = \frac{\Delta_5}{\Delta}$$

with

$$\Delta_5 = \neg\, D_{1Y}' F_2' Z_2 - D_{2Y}' F_1' Z_1$$

(II.6) $$\frac{dY}{dz} = \frac{1}{D} \{(F_1^{r''} + F_2^{r''}) F_1'^2 F_2'^2 + (b_2 - Q_1 D_{1Y}') (- p F_1' Z_1 + F_2' Z_2) - F_1' Z_1 Q_1\}$$

(II.7) $$\frac{d\,(R_1/R_2)}{dz} = \frac{1}{R_2^2 \Delta} \{\neg\, b_2 (R_2 Z_1 + R_1 Z_2) + F_1' F_2' (F_1^{r''} + F_2^{r''}) (R_2 F_2' D_{1Y}' - R_1 F_1' D_{2Y}')\}$$

Summary

The paper analyzes the problem how environmental policy affects sector structure, the allocation of resources, relative price (and comparative advantage) and national income. The frame of reference is a two-sector model in which production generates pollutants as a joint product. The model is closed with respect to the demand side and with respect to the receipts from the emission tax. Conditions with respect to production, emission and demand are specified under which resource use in the pollution-intensively producing sector will fall, resource use in the abatement activity will increase, the relative price of the pollution-intensively produced commodity will rise and national income will fall. Possible extensions are indicated.

Zusammenfassung

Der Artikel untersucht die Frage, wie Umweltpolitik die Sektorstruktur, die Faktorallokation und den Relativpreis (damit den komparativen Preisvorteil) und das Volkseinkommen beeinflußt. Der Bezugsrahmen ist ein Zwei-Sektor-Modell, in dem Emissionen als Kuppelprodukte der Produktion entstehen. Das Modell ist in bezug auf die Nachfrageseite geschlossen. Es leitet Bedingungen ab, unter denen der Ressourceneinsatz im umweltintensiven Sektor sinkt, in der Entsorgung steigt, der Relativpreis des umweltintensiven Gutes steigt und das Volkseinkommen sinkt. Mögliche Erweiterungen werden aufgezeigt.

DOI https://doi.org/10.3790/schm.98.3.281 | Generated on 2025-11-18 19:08:31
OPEN ACCESS | Licensed under CC BY 4.0 | https://creativecommons.org/about/cclicenses/

References

D'Arge, R. C., and A. V. *Kneese* (1972), Environmental Quality and International Trade, in: D. E. Kay und E. B. Skolnikoff (Ed.), World Eco Crisis: International Organization, Vol. 26, S. 419 - 465.

Gerelli, E. (1972), Problemes Economiques Internationaux de l'Environment: Commerces Internationaux et Pollution Transfrontière, in: Schweizerische Zeitschrift für Volkswirtschaftslehre und Statistik, Vol. 108, S. 439 - 451.

Gutenberg, E. (1972), Grundlagen der Betriebswirtschaftslehre, Bd. I: Die Produktion, 19. Aufl., Berlin, Heidelberg, New York.

Markusen, J. R. (1975), International Externalities and Optimal Tax Structures, in: Journal of International Economics, Vol. 5, S. 15 - 29.

Pethig, R. (1975), Umweltverschmutzung, Wohlfahrt und Umweltpolitik in einem Zwei-Sektoren-Gleichgewichtsmodell, in: Zeitschrift für Nationalökonomie, Bd. 35, S. 99 - 124.

— (1976), Pollution, Welfare and Environmental Policy in the Theory of Comparative Advantage, in: Journal of Environmental Economics and Management, 2, S. 160 - 169.

Siebert, H. (1974), Comparative Advantage and Environmental Policy: A Note, in: Zeitschrift für Nationalökonomie, Vol. 34, S. 397 - 400.

— (1974), Environmental Protection and International Specialization, in: Weltwirtschaftliches Archiv, Vol. 110,, S. 494 - 508.

— (1976), Die Umwelt in neoklassischen Außenhandelsmodellen, in: P. J. Jansen, O. Moeschlin, O. Rentz (Hrsg.), Quantitative Modelle für ökonomisch-ökologische Analysen, Meisenheim am Glan, S. 105 - 124.

— (1976), Environmental Control, Economic Structure and International Trade, in: Ingo Walter (Hrsg.), Studies in International Environmental Economics, S. 29 - 56.

— (1977), Environmental Quality and the Gains from Trade, in: Kyklos, Vol. 30, S. 657 - 673.

— (1978), Ökonomische Theorie der Umwelt, Tübingen.

Sontheimer, K. (1975), Technical Change and the Choice Between Standards and Charges for Environmental Control, Paper presented at the Third Reisenburg Symposium: On the Stability of Contemporary Economic Systems.

Tietenberg, T. H. (1973), Specific Taxes and the Control of Pollution: A General Equilibrium Analysis, in: Quarterly Journal of Economics, Vol. 87, S. 503 - 522.

Walter, I. (1974), International Trade and Resource Diversion: The Case of Environmental Management, in: Weltwirtschaftliches Archiv, Vol. 110, S. 482 - 493.

— (1975), International Economics of Pollution, New York.

DOI https://doi.org/10.3790/schm.98.3.281 | Generated on 2025-11-18 19:08:31
OPEN ACCESS | Licensed under CC BY 4.0 | https://creativecommons.org/about/cclicenses/